NNF140.2LS.V

Dimensions and Parameters

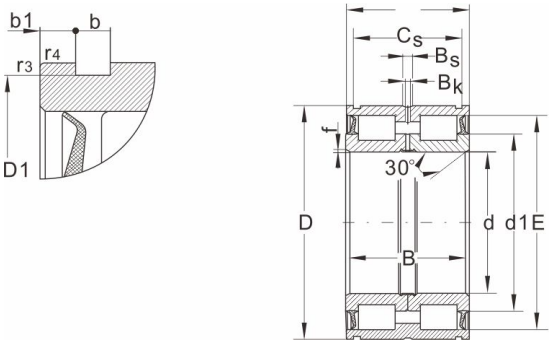

Bearing No.	NNF140.2LS.V

Boundary dimensions（mm）

d	140
D	200
B	80
C	79
CS	71.2
r3,r4 Min	0.6

Basic load ratings(kN)

Dynamic(Cr)	445
Static(Cor)	840
Limiting speed(rpm)	750

Bearing dimensions

d1	160
D1	196
b	4.2
b1	3.9
Bs	--
Bk	--
f	1.8
C1[1)] +-0.1	65
C2[2)] +-0.1	63

Stop ring

WRE	WRE200
to DIN 471	200×4
Weight	8