FCDP96130460

Dimensions and Parameters

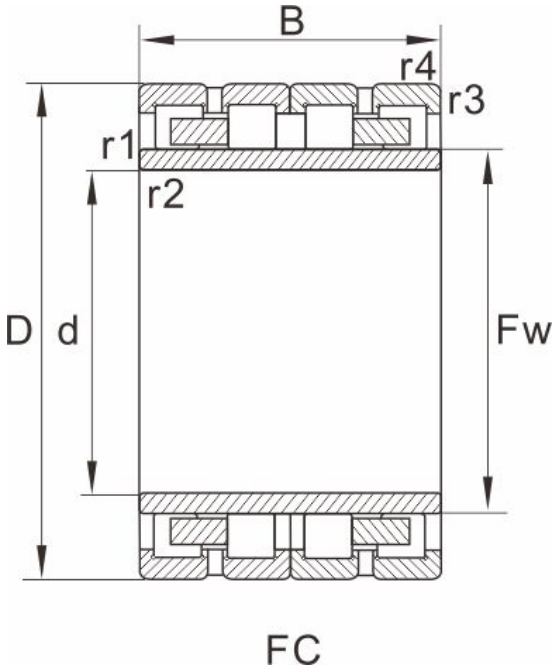

Bearing No.	FCDP96130460

Boundary dimensions(mm)

d	480
D	650
B	460
Fw	526
r1.2min	5
r3.4min	5
Draw	9

Basic load ratings(kN)

Dynamic(Cr)	7730
Static(Cor)	20800
Weight (kg)	443

Reference model

SKF	
FAG	
NTN	
NSK	
KOYO	96FC65460