FCDP10014530A

Dimensions and Parameters

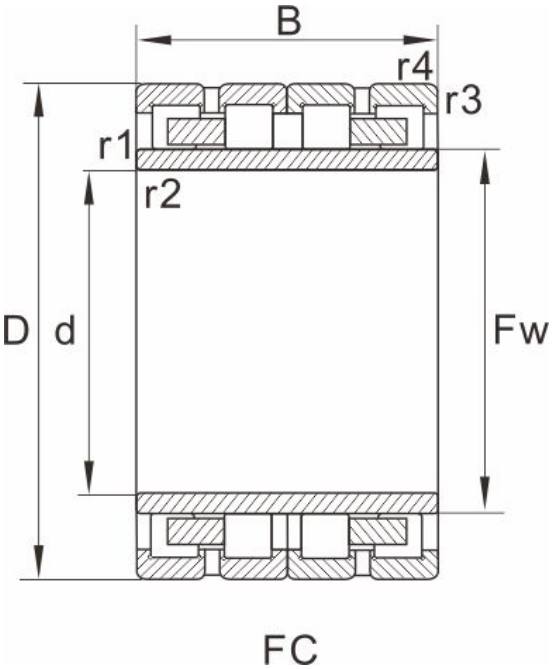

Bearing No.	FCDP10014530A

Boundary dimensions(mm)

d	500
D	720
B	530
Fw	568
r1.2min	6
r3.4min	6
Draw	10

Basic load ratings(kN)

Dynamic(Cr)	10800
Static(Cor)	28500
Weight (kg)	780

Reference model

SKF	314441B
FAG	513378A
NTN	4R10015
NSK	
KOYO	