7305B

Dimensions and Parameters

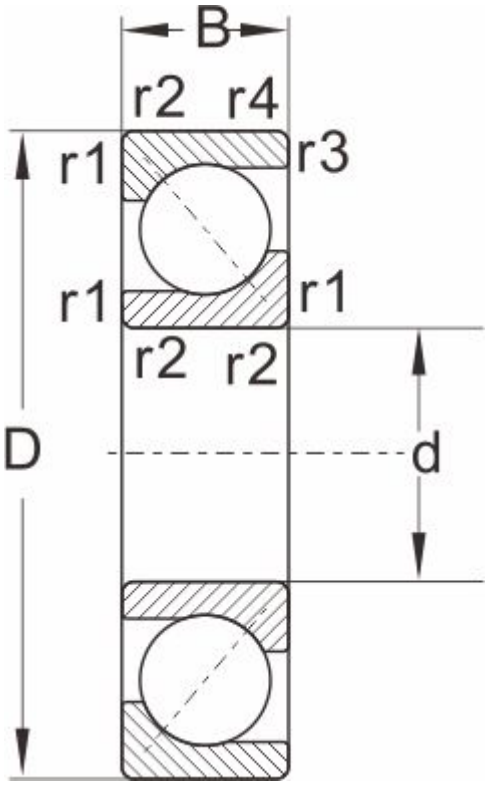

Designations	7305B
Boundary dimensions	
d	25
D	62
B	17
r1,r2 Min	1.1
a ≈	0.6
Load ratings[KN]	
Dynmic Cr	26
stat Cor	15
Speed ratings[rpm]	
grease	9500
oil	14000
Mass	0.23