29420E

Dimensions and Parameters

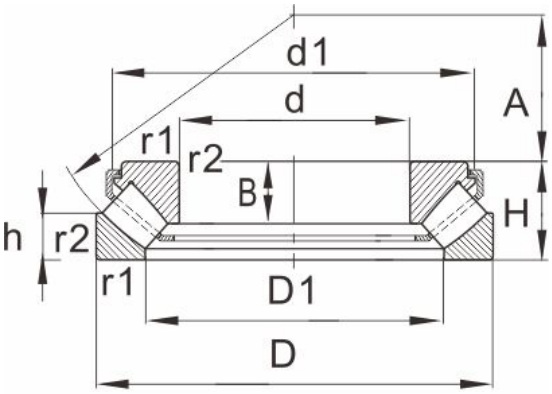

E(J)

Designation	29420E
Dimensions(mm)	
d	100
D	210
H	67
r1,r2 min	3
Load ratings(KN)	
dyn Cr	830
stat Cor	2450
Speed ratings(rpm)	
grease	2200
oil	2600
Dimensions	
D1	142
d1	185
h	32
B	43
B1	24
A	62
Mass	
E.MB	10.5
E(J)	9.94